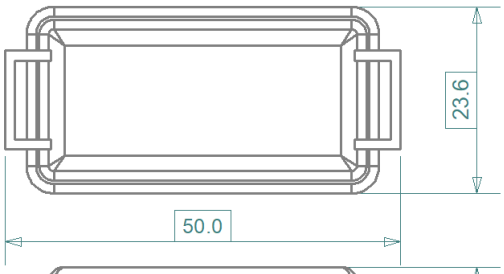

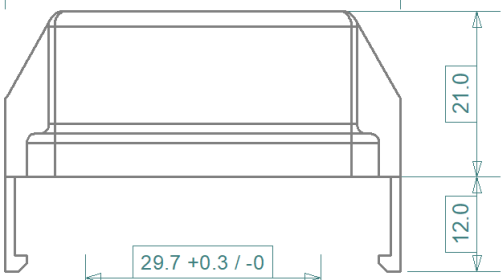

3D not to scale

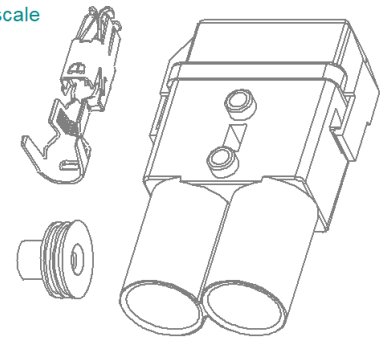

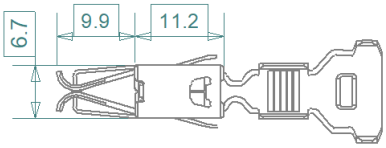

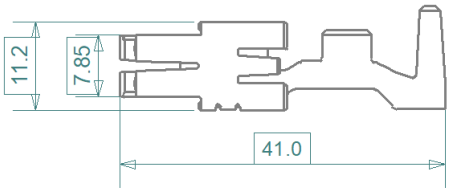

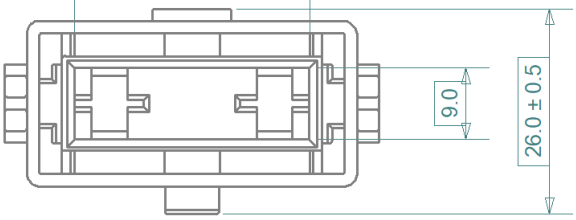

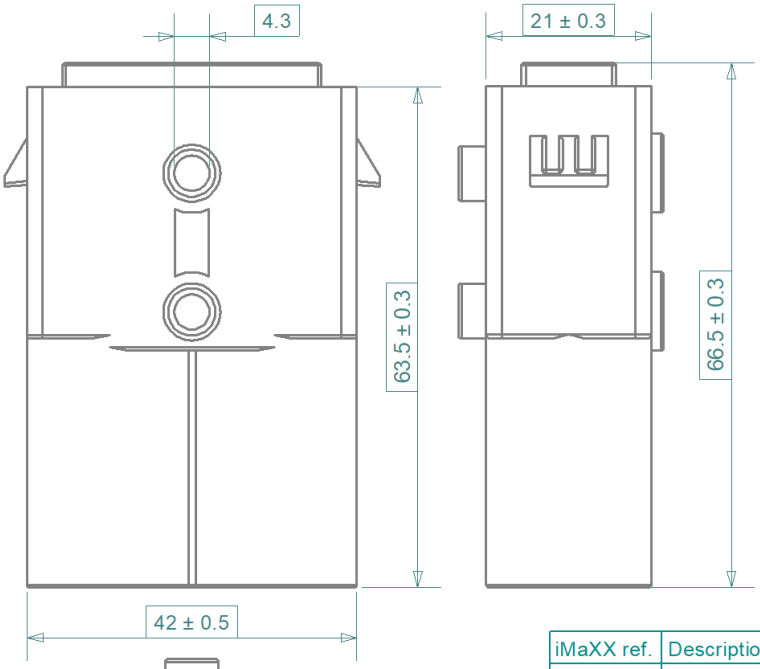

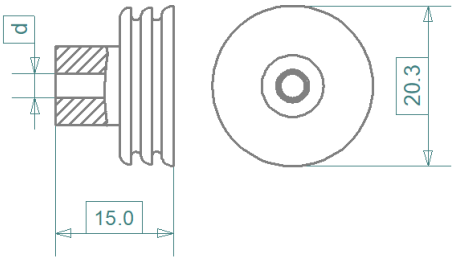

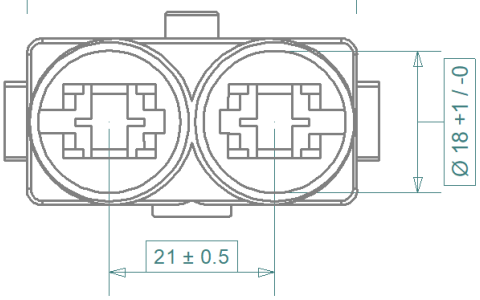

iMaXX ref.	Description
H9301	FH maxiOTO, body 1P, PA66-GF35, UL94-V0, Black
H9305	FH maxiOTO, clear cover 1P, PC with integrated NBR seal
CCS930FL	Contact 4.0 - 6.0mm², CiNiSi, Sn plated, use with seal
CCS931FL	Contact 6.0 - 10.0mm², CiNiSi, Sn plated, use with seal
S183548X	Seal for cable 2.5 - 6.0mm², Silicone, 45 ± 5 Shore, Blue, d = 3.1mm
S184862X	Seal for cable 6.0 - 10.0mm², Silicone, 45 ± 5 Shore, Gray, d = 4.4mm
H9315-A	FH maxiOTO kit, parts for 10x holder 4.0 - 6.0mm²
H9315-B	FH maxiOTO kit, parts for 10x holder 6.0 - 10.0mm²

Revisions					
Date	Type		Date	Appr.	
		Drawn	10/19	GRH	
		Checked	10/19	BE	
		Standards			
		Approved	10/19	AdH	
		Scale 1 : 1		Title	H9300 series, maxiOTO blade fuse holder
		Projection	Tolerance ± 0.2 mm unless otherwise noted	Drawing type	schematic
				Drawing number	H9300 drawing 1
				Sheet	1 of 1
				Layers / Sheet	0 1 2 6 9
				Sheet	01